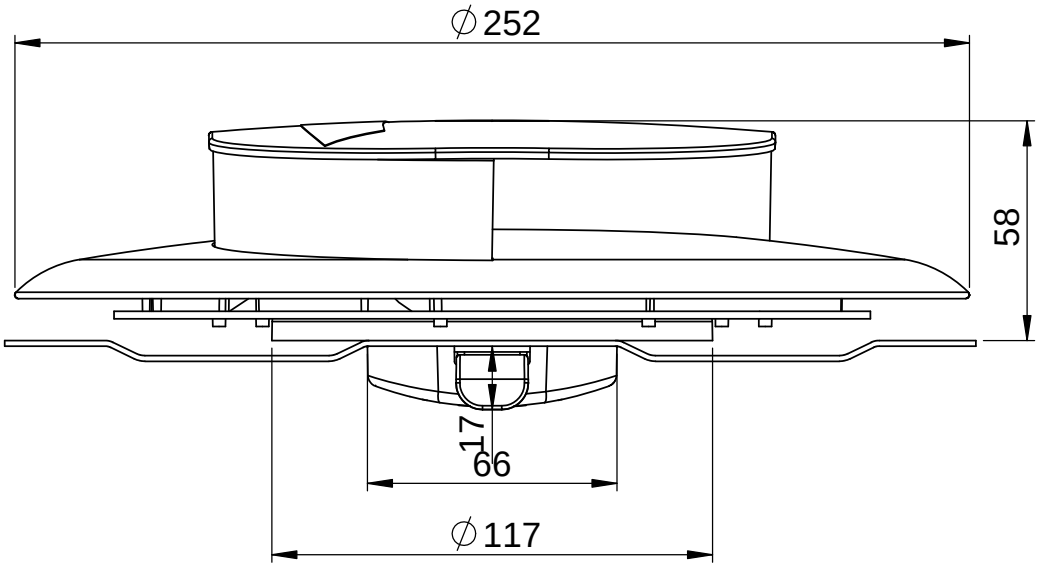
∅252
58
17
66
∅117

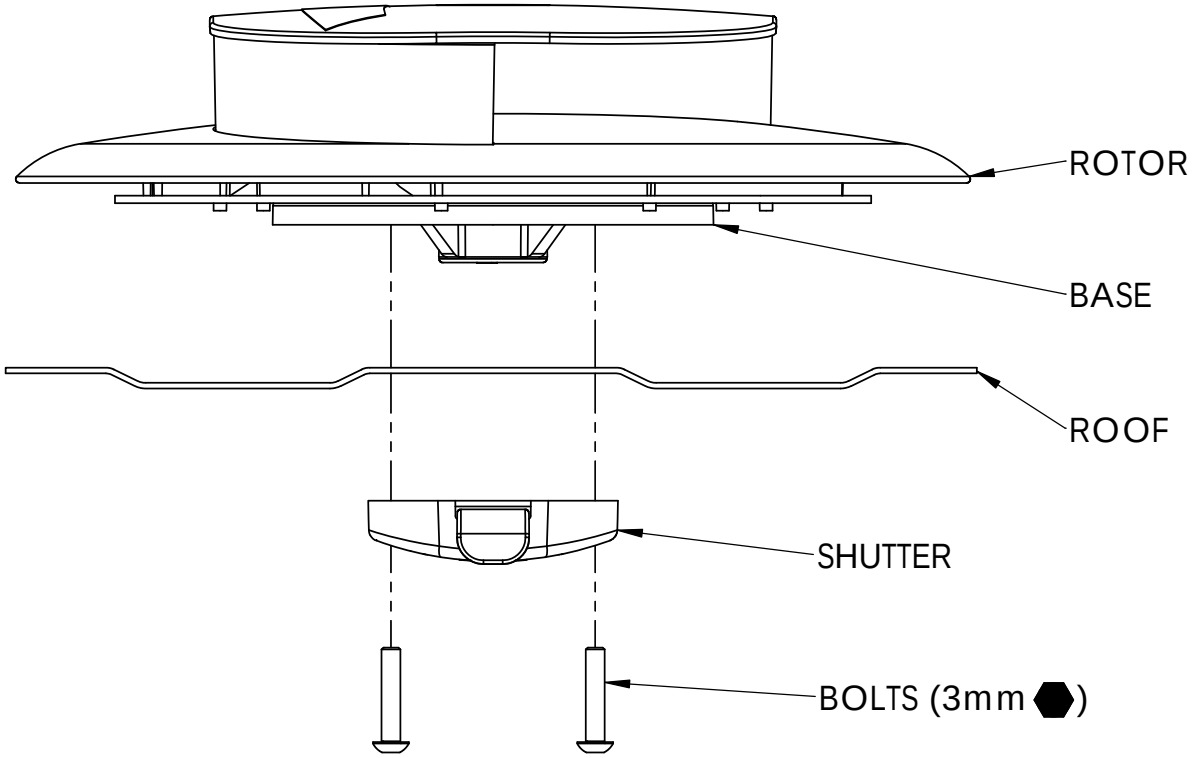
ROTOR
BASE
ROOF
SHUTTER
BOLTS (3mm ⬢)

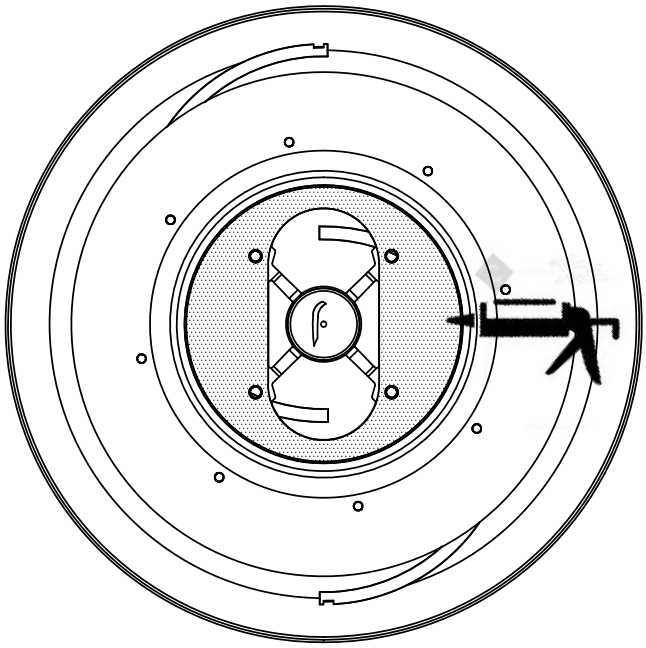

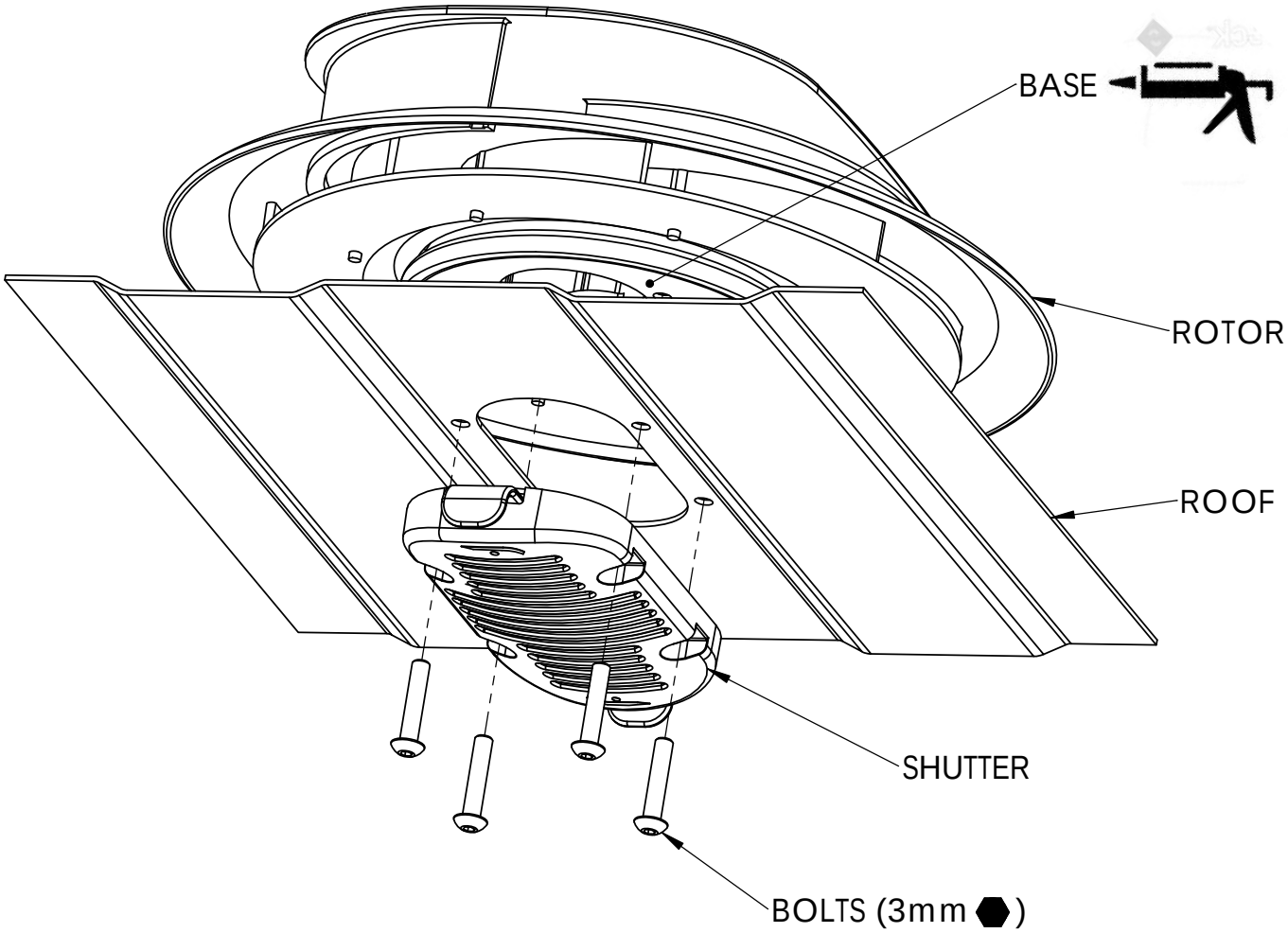
BASE
ROTOR
ROOF
SHUTTER
BOLTS (3mm ⬢)

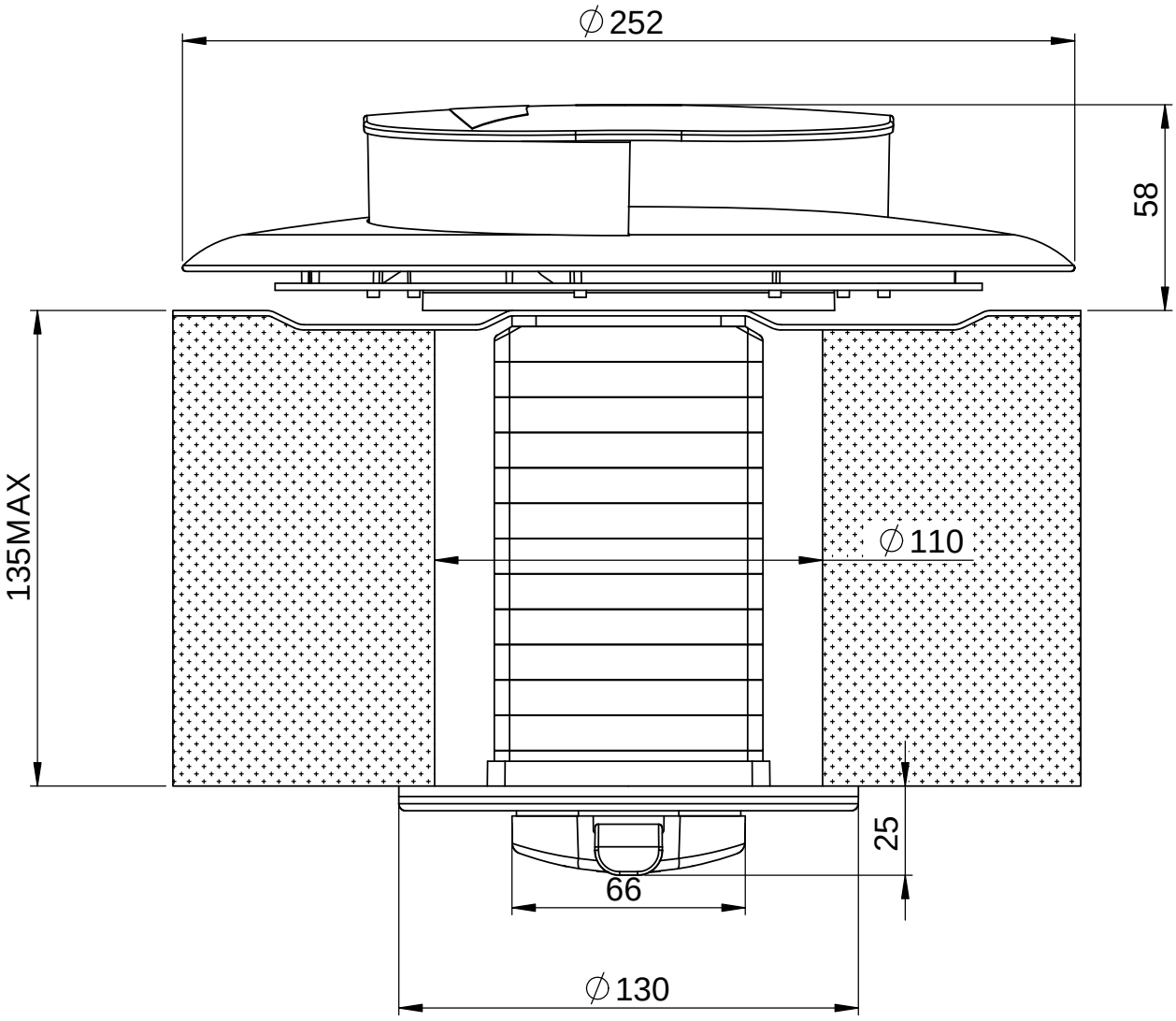
∅252
58
135MAX
∅110
25
66
∅130

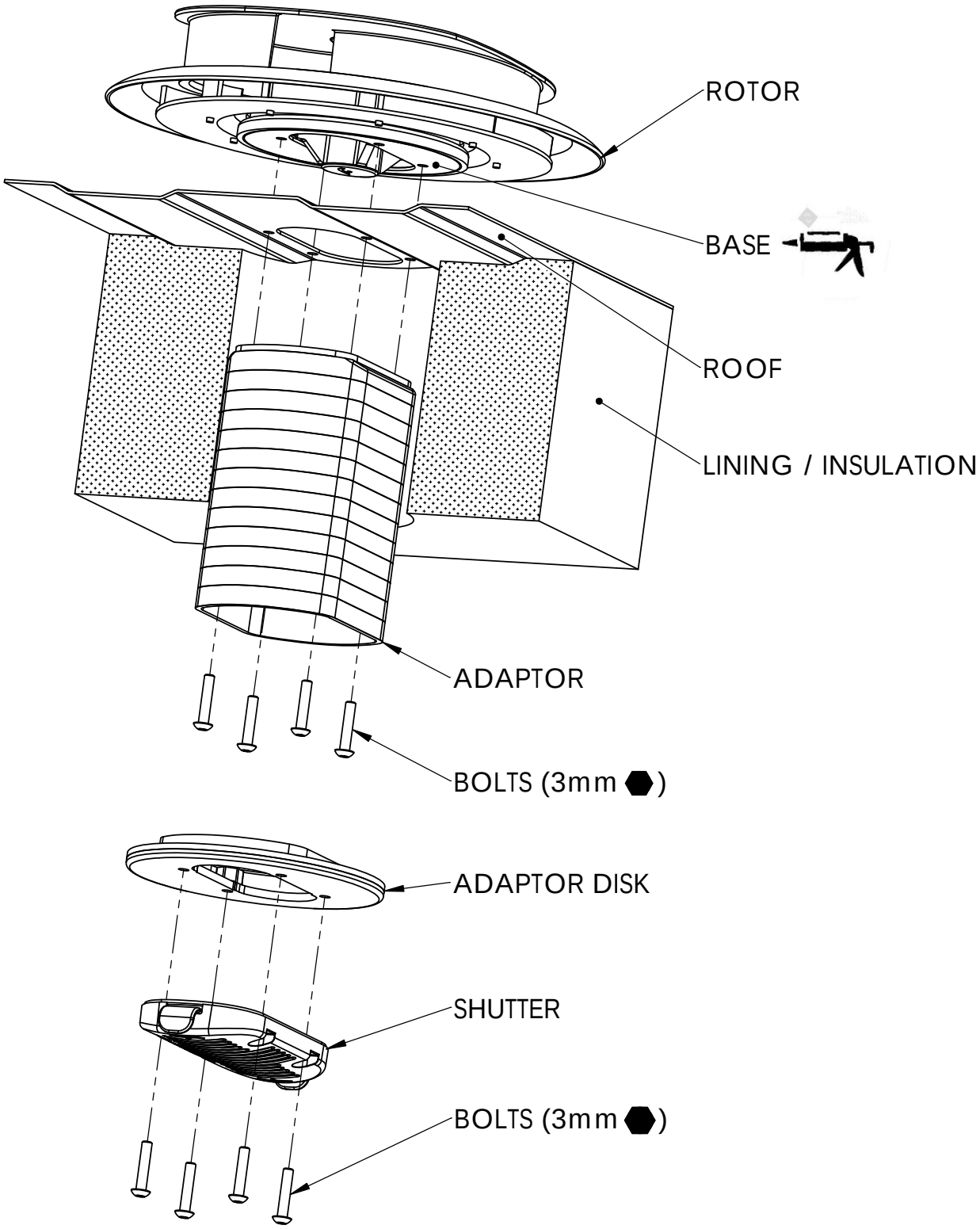
ROTOR
BASE
ROOF
LINING / INSULATION
ADAPTOR
BOLTS (3mm ⬢)
ADAPTOR DISK
SHUTTER
BOLTS (3mm ⬢)